The 2-stroke ME-LGIM

The dual fuel engine designed for operation on Methanol

René Sejer Laursen

Promotion Manager, ME-GI/LGI

E-mail: ReneS.Laursen@man.eu

CSSC-MES Diesel Co. Celebration

Manufacturing 10 million MAN Diesel & Turbo designed BHP

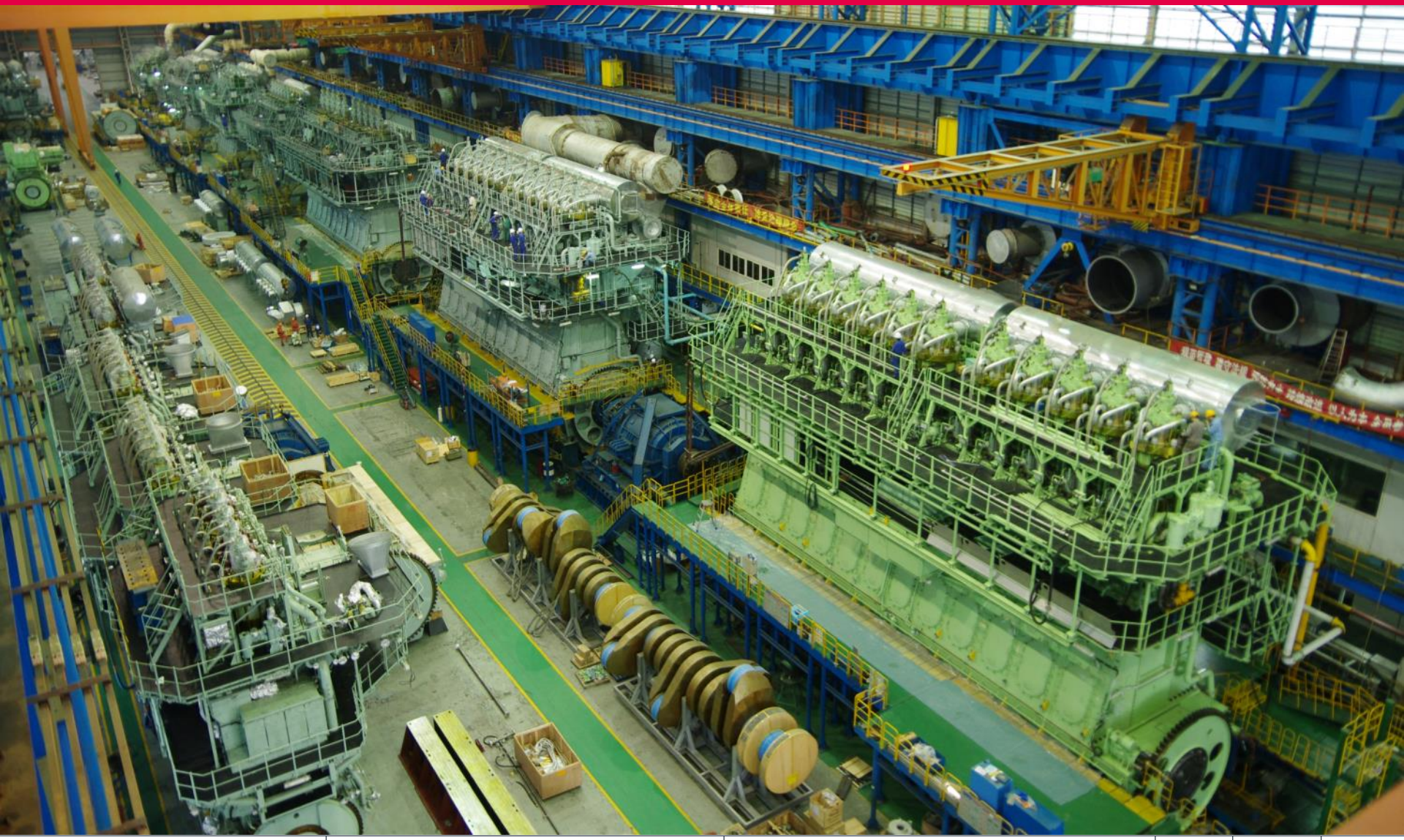

Dual fuel engine reference list

Orders including options

No. of engines	Type			Mk.	Gensets	Fuel
5	S	90	ME-C-GI	10.5		Methane
2	G	90	ME-C-GI	10.5		Methane
128	G	70	ME-C-GI	9.5 , 9.2	8 x 7L35/44 DF	Methane
5	L	70	ME-C-GI	8.2	15 x 9L28/32 DF	Methane
4	S	70	ME-C-GI	8.2, 7	6 x 9L28/32 DF	Methane
6	S	50	ME-C-GI	8.2		Methane
6	G	50	ME-C-GI	9.5	8 x 7L28/32 DF 4 x 5L28/32 DF	Methane
4	G	45	ME-C-GI	9.5	4 X 5L23/30 DF 8 x 8L23/30 DF	Methane
6	G	50	ME-B-LGIM	9.5		Methanol
3	S	50	ME-B-LGIM	9.3		Methanol
5	G	60	ME-C-GIE	9.5		Ethane
3	G	50	ME-C-GIE	9.5		Ethane

Total dual fuel engines including options 177 engines

Total power main engine 3.19 GW

Total dual fuel 2-Stroke in service 28 engines

Korea and Japan Welcome the First

Methanol-Fueled, Ocean-Going Vessels

Starting on April 18, Waterfront Shipping Company Ltd. (WFS), Marinvest/Skagerack Invest (Marinvest), Westfal-Larsen Management (WL), and Mitsui O.S.K. Lines, Ltd. (MOL) attended a series of traditional ship-naming ceremonies and took delivery of the first Korean- and Japanese-built, methanol-fueled ocean tankers – the ‘Lindanger’, ‘Mari Jone’ and ‘Taranaki Sun’.

All 7 Methanol-fuelled vessels entered service in 2016

Today more than 7500 operations hours on methanol

ME-GI and ME-LGI Gas Technologies

ME-LGI Methanol - Development Milestones

LGI demonstration event at MDT 4T50ME-X

Test at MDT 4T50ME-X

Test at MES 4S50ME-T9

Test at MES 7S50ME-B9.3

Celebration at MES

Test at HHI 7G50ME-B9.3

TAT at MES 4S50ME-T9

Sea trial MNS *Taranaki Sun*

Sea trial HMD *Lindanger*

Sea trial HMD *Mari Jone*

Sea trial HMD *Leikanger*

Sea trial M752

2015 2016 2017

7S50ME-LGI engine >>Top section<< design

Designed for Methanol

The ME-GI is derived from the industry's standard MC and ME engine.

- **Diesel cycle** high fuel efficiency ~**50%** versus much lower for other engine types.
- High fuel flexibility
- High **reliability** – same as fuel engines.
- ***No derating*** because of ***knocking*** danger.
- ***Negligible fuel slip.***
- ***A robust gas combustion – unchanged load response – unaffected by ambient condition***

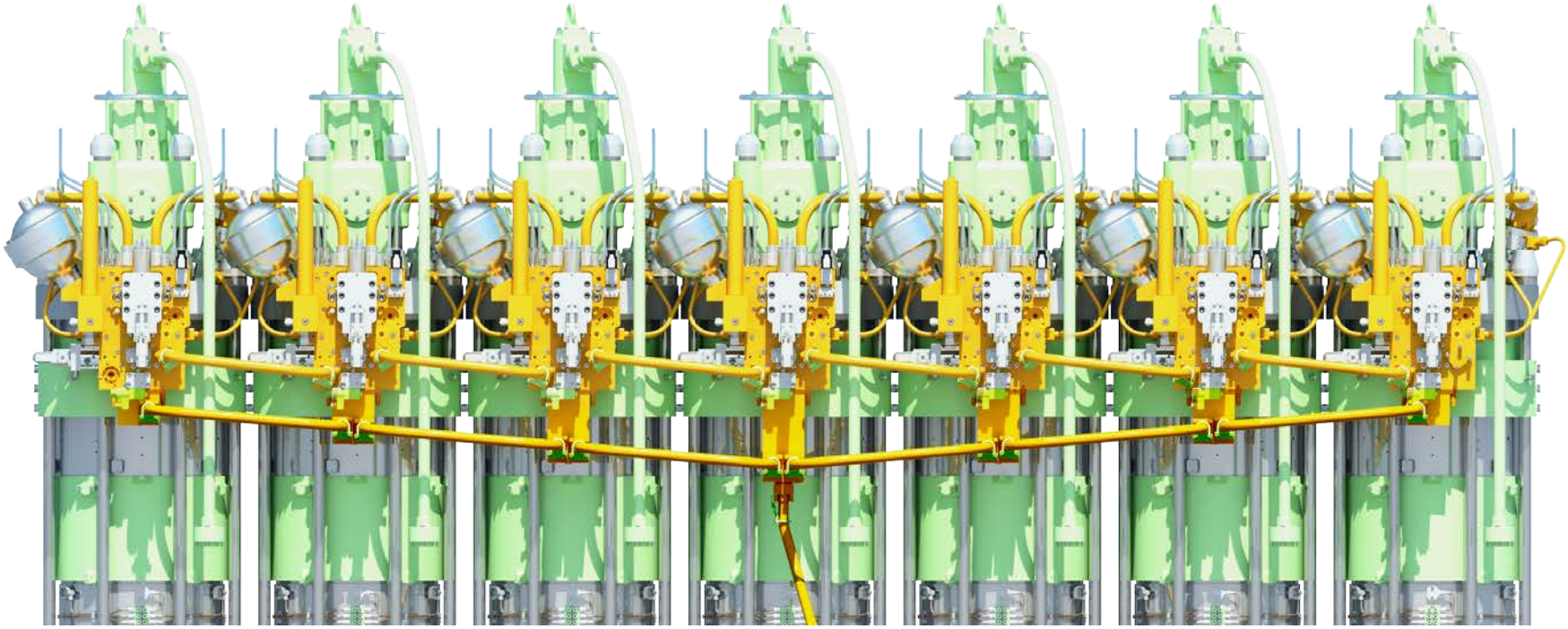

ME-LGI Combustion Principle

- The ME-LGI engine is a dual fuel engine
- Diesel combustion process →
- High effciency

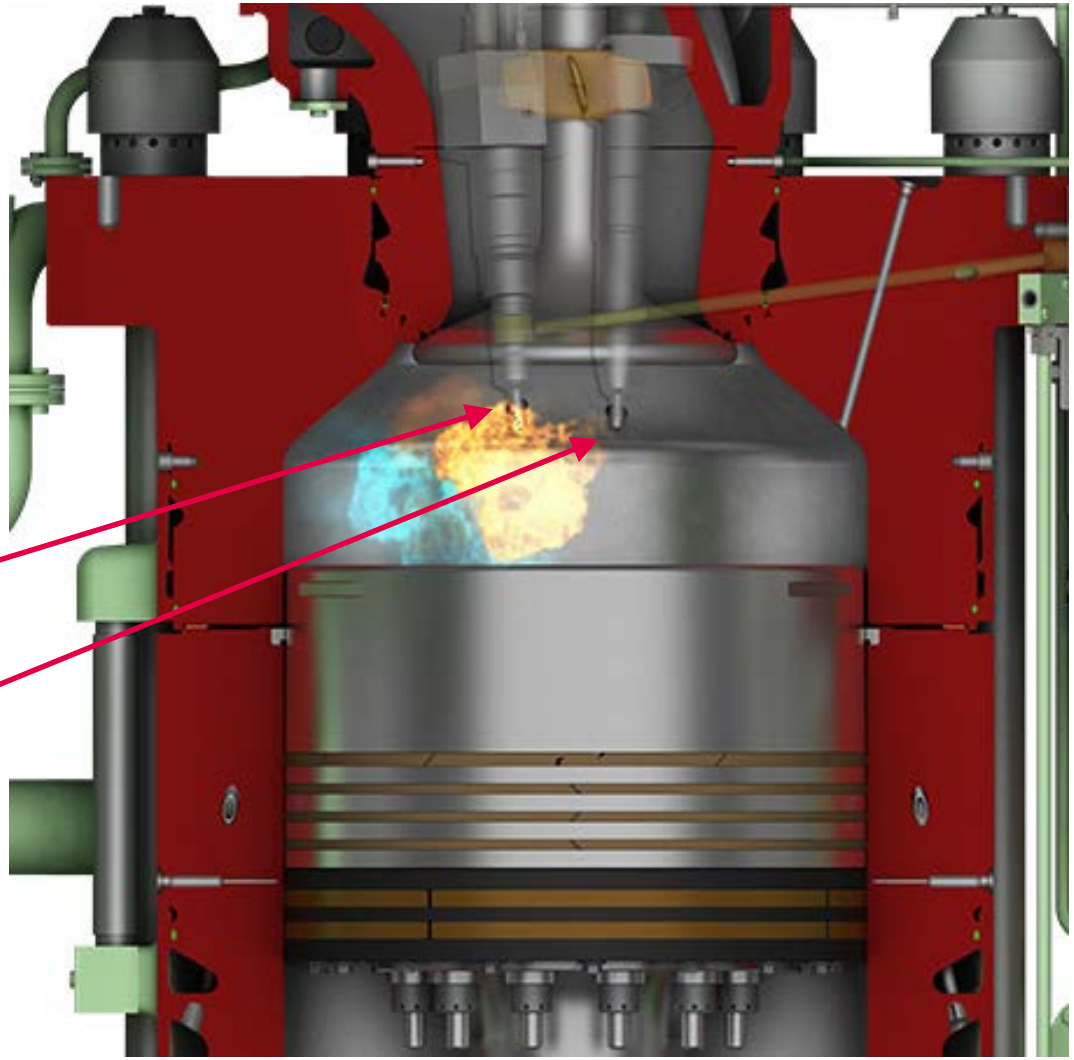

Dual Fuel Operation Keep the Power

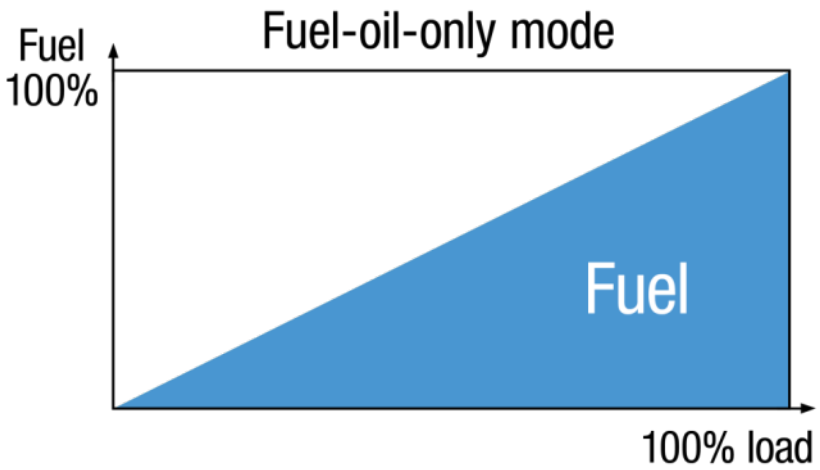

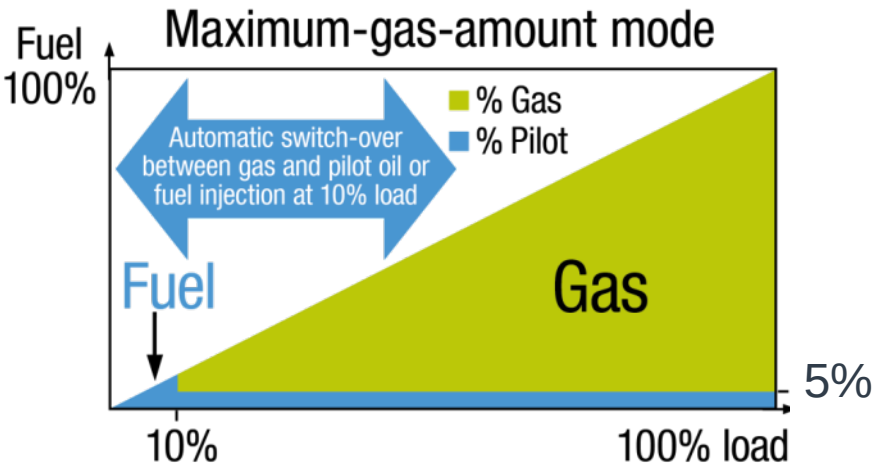

ME-LGI-S System Overview

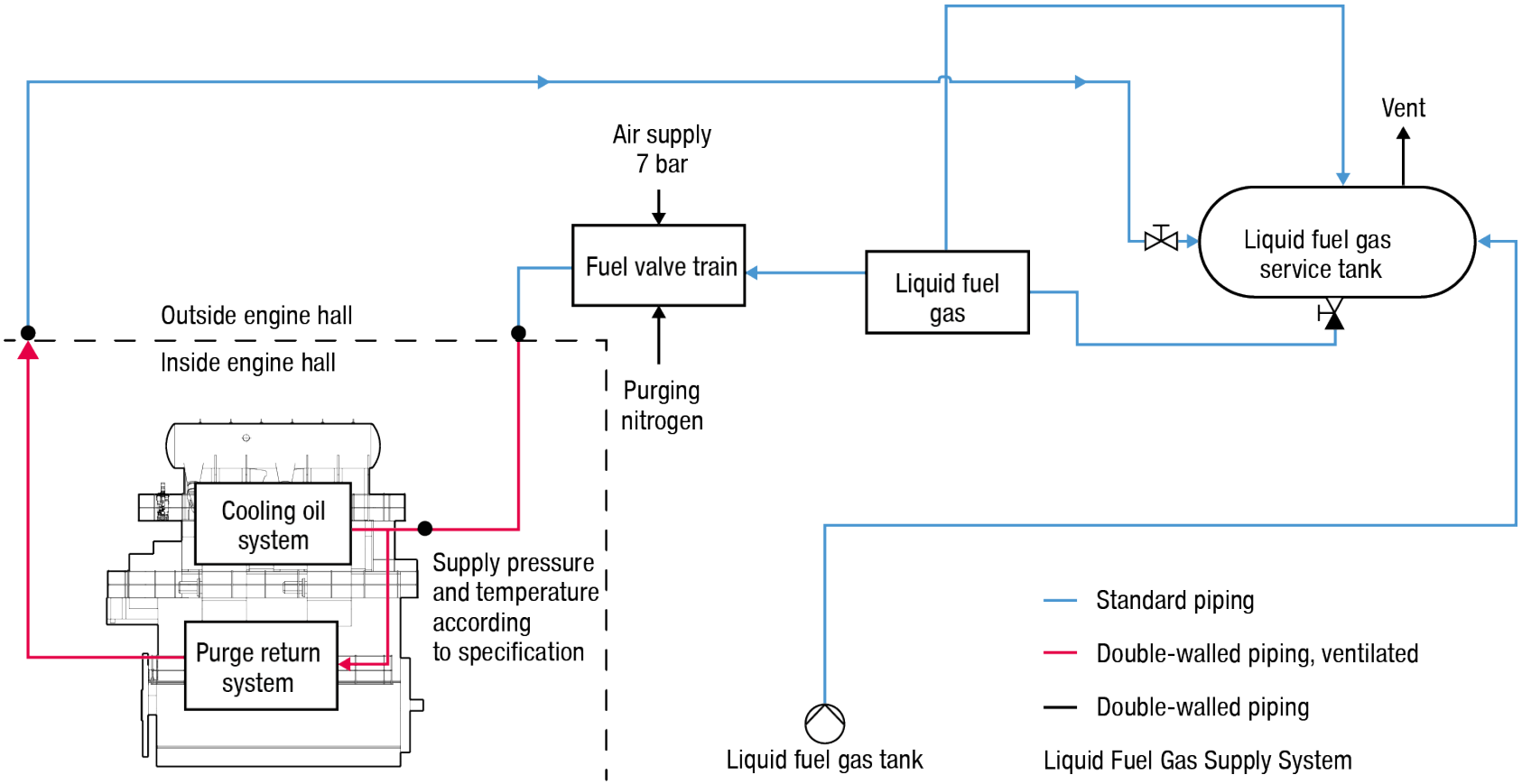

ME-GI and ME-LGI Gas Technologies

ME-LGI G50 and S50 Methanol Engines: Service Experience

Service status:

- 4 vessels from HHI in service
- 1 out of 3 vessel from MES in service
- Approx. 7500 service hours
- First start up of MeOH operation was carried out by the crew alone

Challenges:

- Plunger in good condition after shop-test

- Cut-off shaft in good condition after shop-test

- Atomiser in good condition after shop-test

- Broken springs in fuel diesel fuel valves

- Unstable HC sensors fixed

- Several SW bugs have disturbed operation

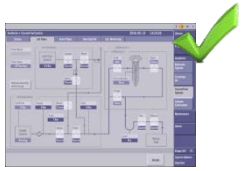

ME-GI and ME-LGI Gas Technologies

ME-LGI: Performance Set-up: LGI Tier-III

To reach Tier-III NOx emissions:

- Tested at Mitsui test engine with compromised performance setup
- Two separate technologies:
  - EGR
  - Water mixing in methanol

EGR

- The same EGR system and settings were used for diesel (DI) and methanol (LGI)
- Duration: 4 days September 2016

Methanol + water

- Water was mixed into the methanol in order to cool the flame, which should reduce the thermal NOx production
- Duration: 2 days September 2016

Engine	4S50ME-T-9.5-LGI
MCR rating	7120kW @ 117 rpm
MIP	21 bar
Bore	0.5 m
Stroke	2.214 m
Cylinders	4
V_{comp}	20 liter /cyl.
Fuels	Diesel and methanol

ME-GI and ME-LGI Gas Technologies

ME-LGI: Performance Results: EGR - SFOC and NOx

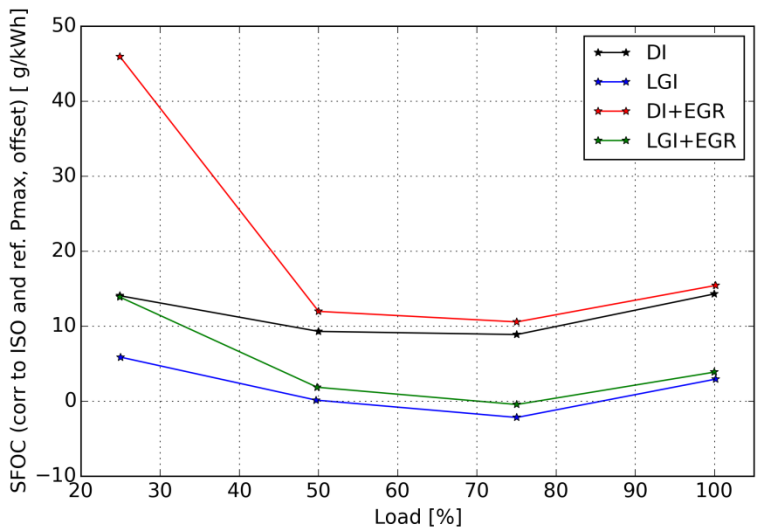

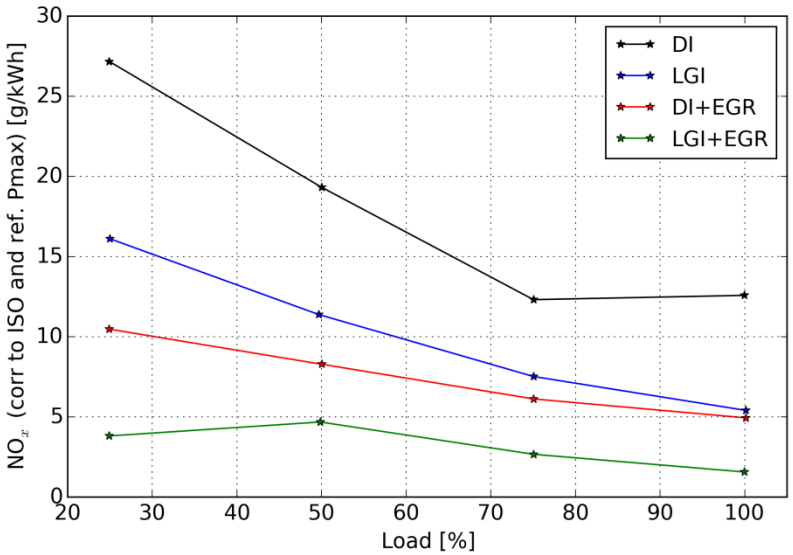

Tests	#	NOx ISO	ΔSFOC ISO (relative to LGI)
DI	T60	14,0	+10,8
DI+EGR	T63''	6,2	+14,1
LGI	T62	7,8	0
LGI+EGR	T63'	2,7	+1,8

ME-GI and ME-LGI Gas Technologies

ME-LGI: Performance Results: Water in Methanol - Emissions

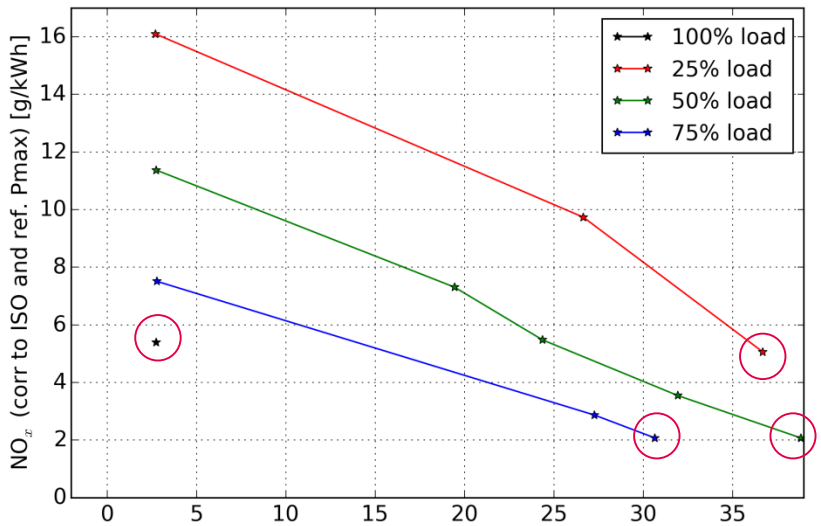

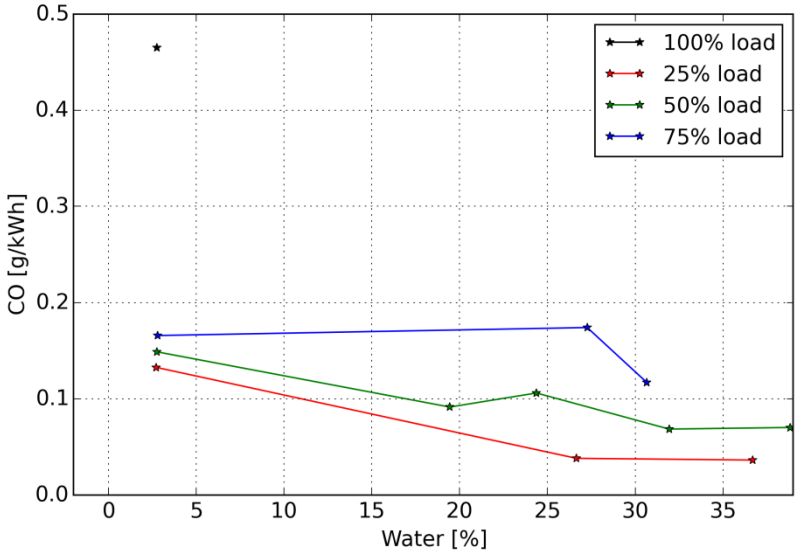

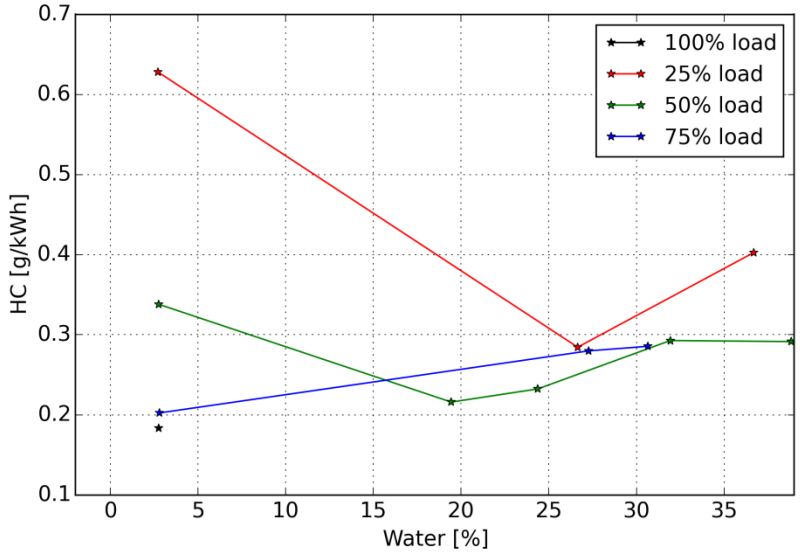

- NOx decreases almost linearly with water content
- NOx emissions are close to 2 g/kWh at 50 and 75% load
- NOx emissions at 25% load is at the “not to exceed limit” for Tier-III, but can be lowered further
- 100% load with high water content not possible due to system limitations

MDT Tier III solution with methanol

Market potential

EGR

SCR

The 3rd option tier III: Water in Methanol is under investigation.

Tier III can be met with a mixture of 40% water and 60% methanol
Long term effect on liner and piston ring wear needs to be investigated

Disclaimer

All data provided in this document is non-binding.

This data serves informational purposes only and is especially not guaranteed in any way. Depending on the subsequent specific individual projects, the relevant data may be subject to changes and will be assessed and determined individually for each project. This will depend on the particular characteristics of each individual project, especially specific site and operational conditions.